U.S. COFFEE & OFFICE SUPPLIES • WATER • VENDING

NEWCO ACE-D BREWER

ACE-D

Newco designed the ACE series of brewers to satisfy customer requests for a multi-feature specific brewer suited for the office environment. The series is quite versatile and continues to be our top selling line.

ACE models incorporate unique design features that include: a water level detection system that eliminates evaporation short pots, an adjustable brew safety light which flashes during the brew cycle to alert the user the brew cycle is in process, and a gravity hot water faucet system which dispenses hot water while brewing without altering the brew volume.

All the features are built into a stainless steel cabinet for long stability and durability. Newco, making you successful your way.

DISPENSER OPTIONS

ACE-D

Ready light indicates optimum brew temperature achieved

Blinking brew light alerts user that coffee is brewing

Universal base for perfect dispenser alignment

Gravity fed Hot Water Faucet for tea and soups

Tank "ON/OFF" switch

Pulse brewing option

Dimensions

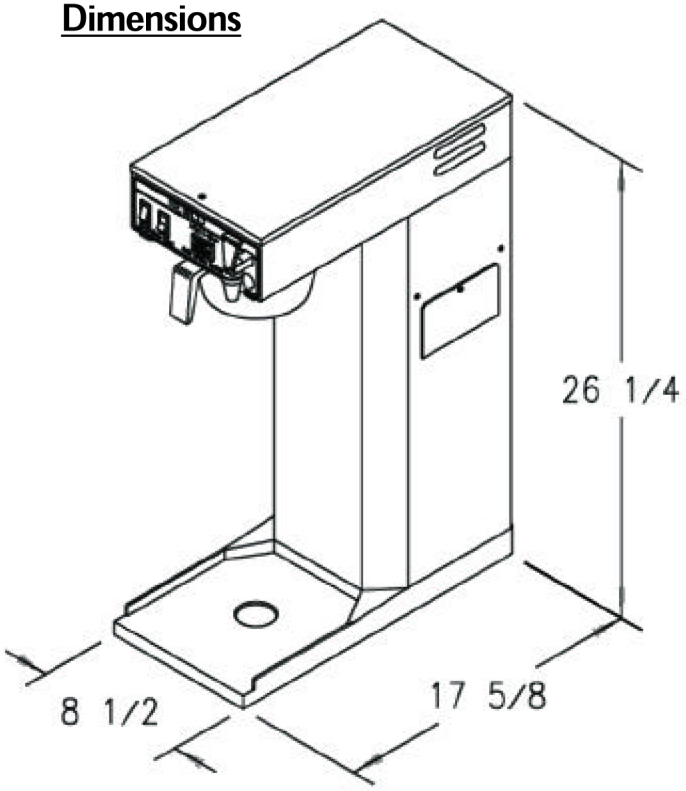

c UL US LISTED

Base Model	Part Number	Volts	Amps USA/Can		Tank Wattage USA/Can		Cubic Feet	Ship Weight	Cord Attached
Ace TC-blk	102381-B	120	11.67	11.67	1400w	1400w	5.16	23 lbs	Yes
Ace LD-blk	102382-B	120	14.58	11.67	1750w	1400w	5.86	25 lbs	Yes
Ace AP-blk	102768-B	120	14.58	11.67	1750w	1400w	6.33	26 lbs	Yes
Ace D-blk	102876-B	120	14.58	11.67	1750w	1400w	7.27	27 lbs	Yes
Ace S-blk	102773-B	120	14.17	11.67	1700w	1400w	5.16	29 lbs	Yes
Ace LP-blk	102774-B	120	14.17	11.67	1700w	1400w	6.68	31 lbs	Yes

Electrical: 120V models are 2 wires plus ground service rated 120V, single phase, 60Hz. 120/240 V models are 3 wires plus ground service rated 120/240 V, single phase, 60Hz

Plumbing: Water line should be 20-90 PSI and have a minimum flow rate of 1.5 GPM. Mechanical connection on brewer is 1/4" male flare connector.

*Cord not included on 240v models

US Coffee
51 Alpha Plaza
Hicksville, NY 11801
1-800-766-2866
sales@uscoffee.com

U.S. COFFEE & OFFICE SUPPLIES · WATER · VENDING